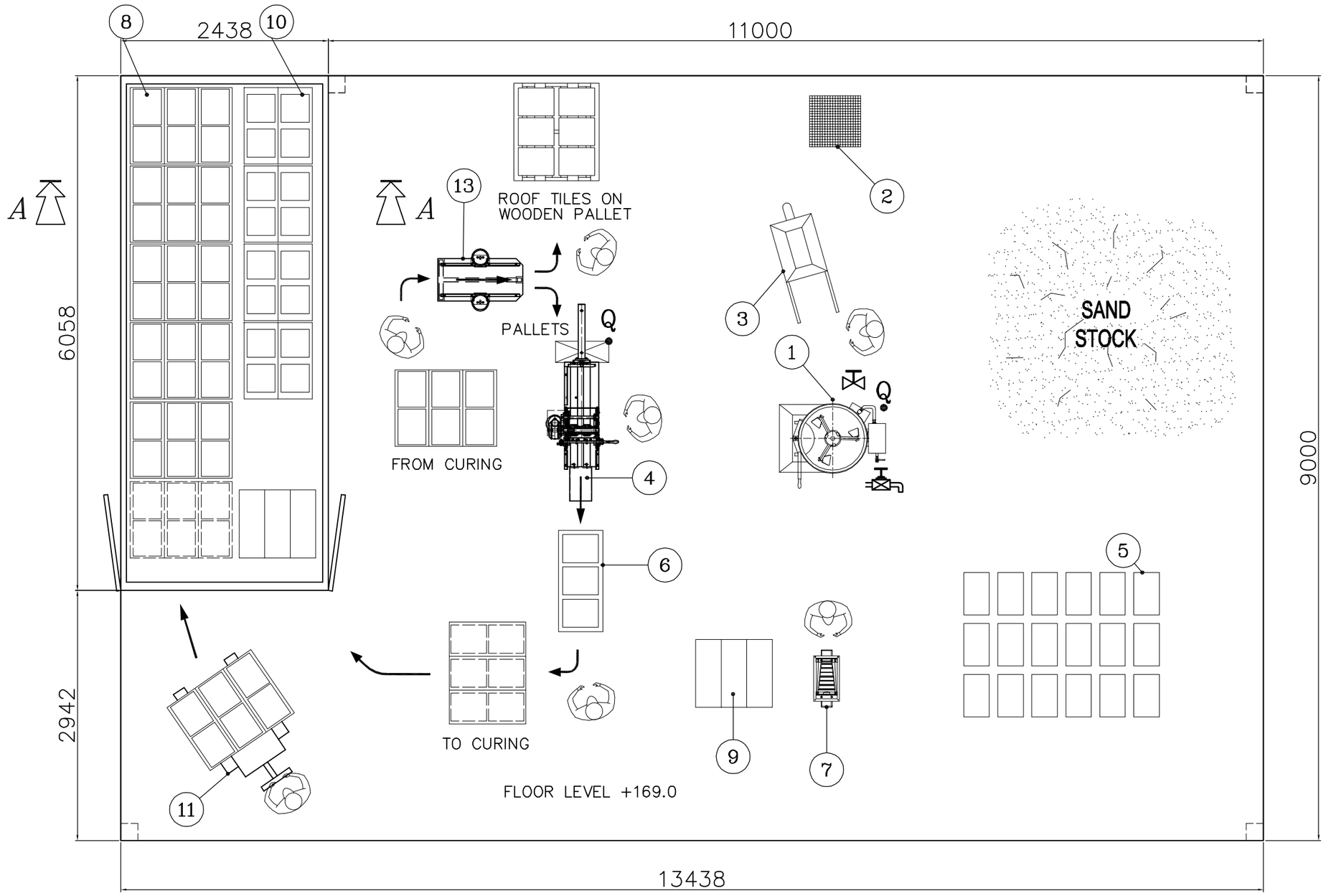

Section A–A

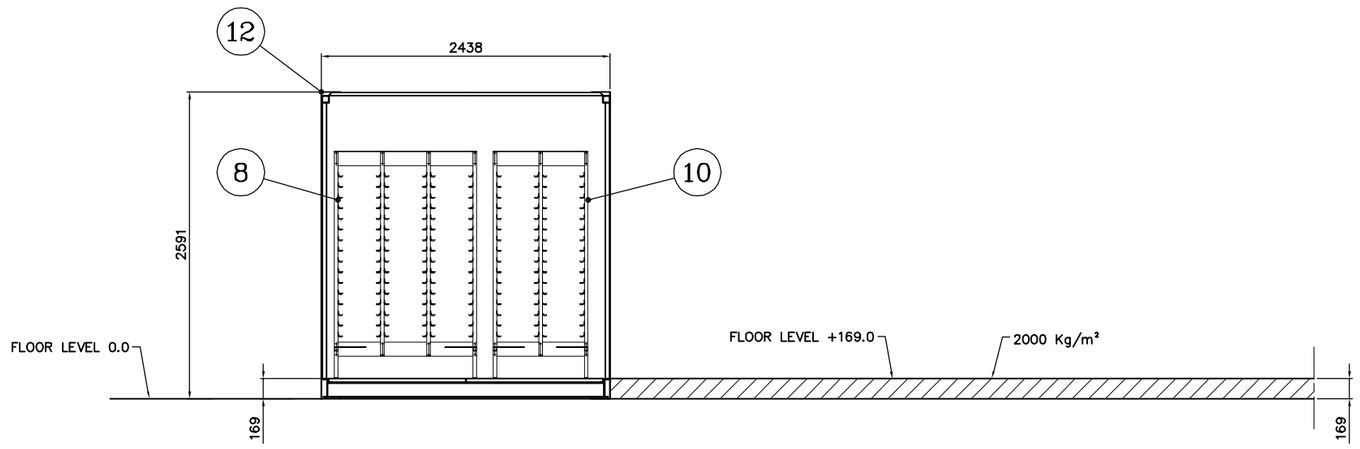

13	N°1 Manual table to demould the cured tiles
12	Used container 20' to be utilised as the curing chamber
11	Transpallet to travel cured roof and floor tiles
10	N°4 Steel curings racks (64 roof tiles capacity)
9	N°1 Steel curing rack (80 ridge capacity)
8	N°7 Steel curings racks (96 roof tiles capacity)
7	Manual bench to produce ridges tiles
6	Holding bench for wet extruded tiles
5	Cement
4	UNO MINI extruder machine (2 roof tiles per minute output)
3	Wheel barrow and shovel to transport the sand to the "UNO" unit
2	Manual screen for the sand grading
1	Small concrete mixer (model TTM 140 liters)

Q • POINTS TO BE CONNECTED TO THE MAIN DISTRIBUTION BOARD (12)

POINTS TO BE CONNECTED BY FLEXIBLE PLASTIC PIPE1" TO THE WATER SUPPLY

AIR UTILIZATION PIPE 1/2" WITH VALVE

I: Questo disegno e' di proprieta' della Vortex Hydra srl e non puo' essere trasmesso a terzi senza autorizzazione.
GB: This document belongs to Vortex Hydra srl and cannot be passed to others without authorization.
PRODUZIONE E/O DIFFUSIONE VIETATA

N:\UTM\AutoCad R2006\DWG-TITLE\logo-VH2.jpg

Fgl. / Sheet 1/1

Scala/Scale 1:25

A0O

Cliente/ Customer

VORTEX - STARTER PACK

Titolo/ Title

for ROOF tiles

"UNO Starter Pack" for ROOF tiles

Disegno / Drawing UNO+UNO

Commessa/Order.

Disegnatore/Draftsman Pigozzi G.

Data/Date 16/05/2017

Controllato/Checked Casoni A.

Data/Date

Approvato/Approved Ing. L. Bonaveri